CONSTRUCTION OF 900MM DIA CULVERTS

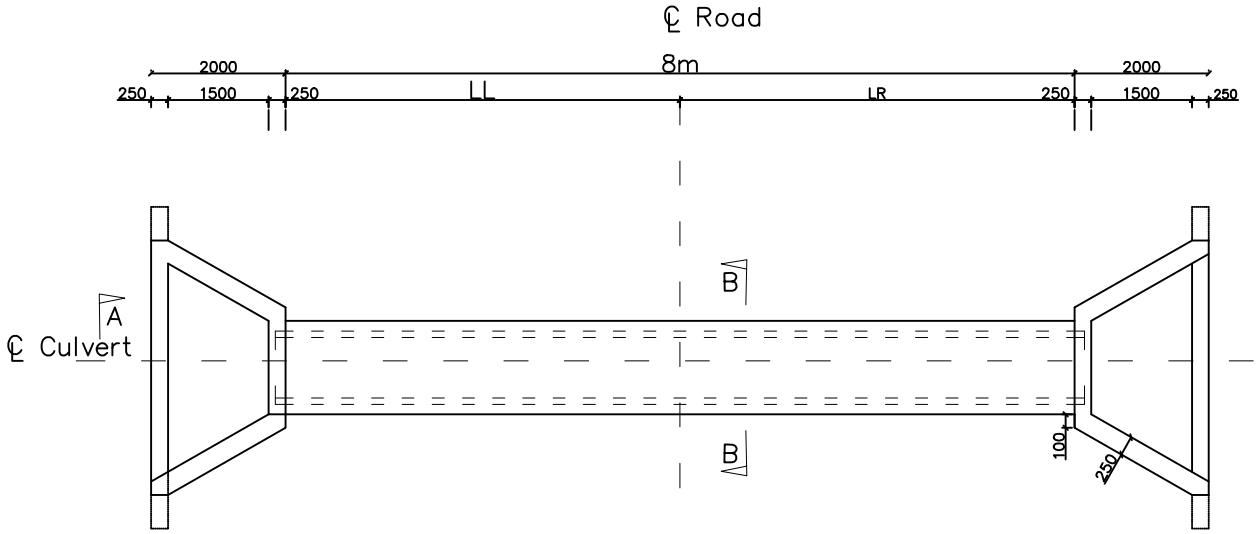

PLAN

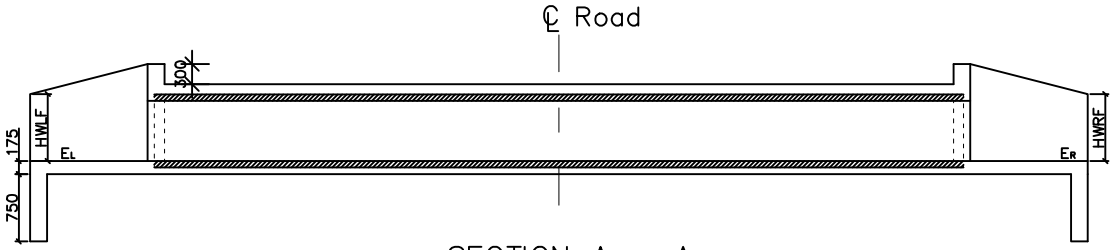

SECTION A – A
SCALE 1:100

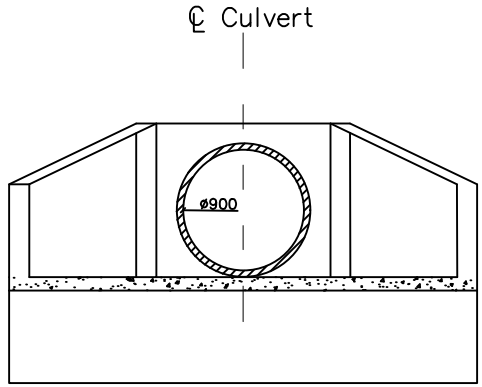

END ELEVATION
SCALE 1:50

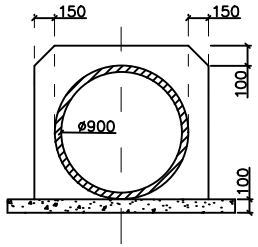

SECTION B – B
SCALE 1:50